Rev	AWO #	Description	Date	Appr
-		RELEASED	12/30/10	

APPROVED: _____

DATE: _____ TITLE: _____

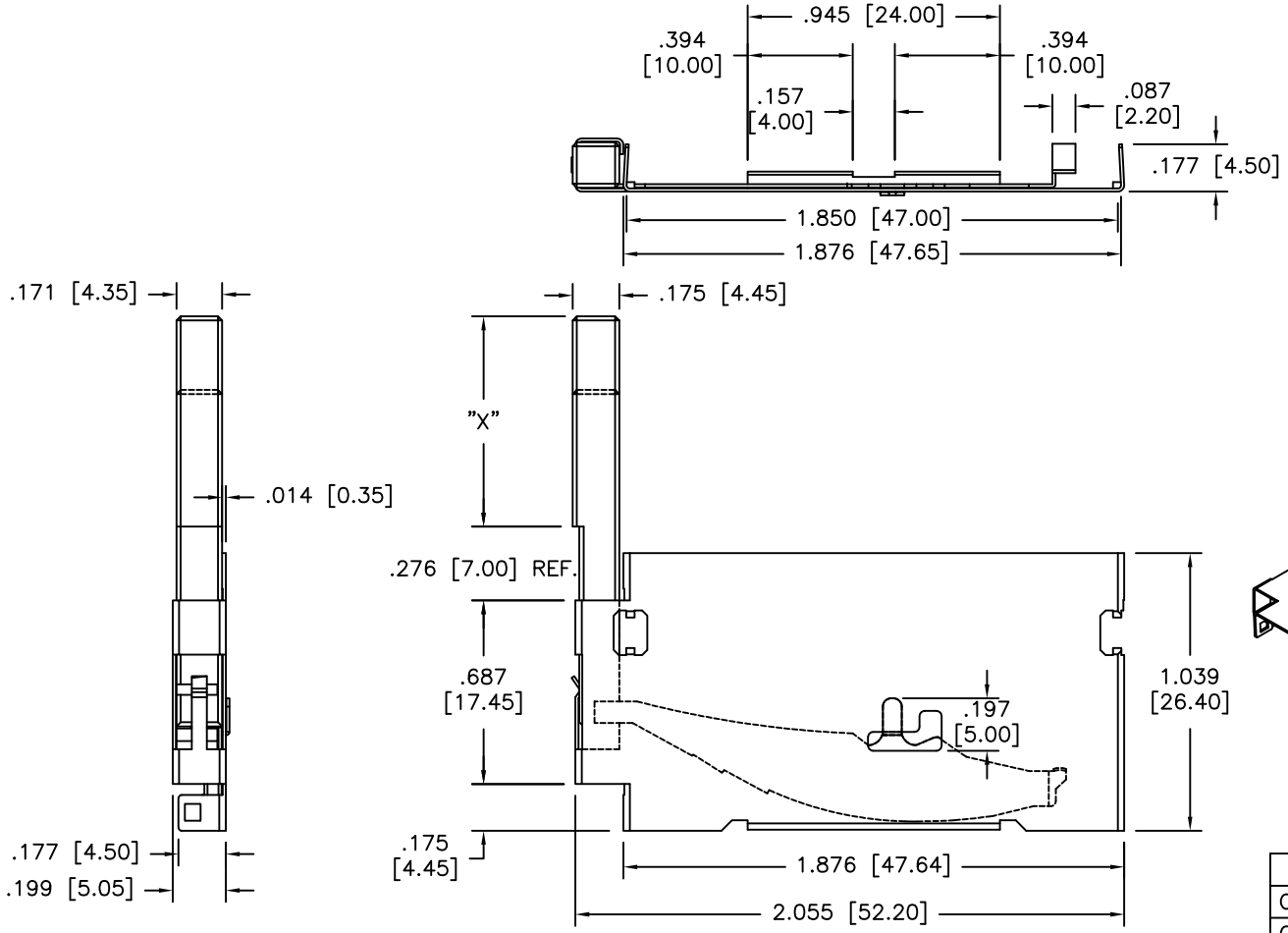

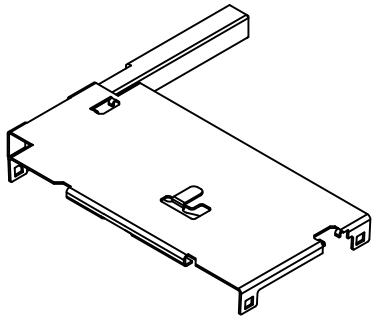

ADAM P/N	Dim."X"
CFE–50–L15	15mm
CFE–50–L20	20mm
CFE–50–L22	22mm

SPECIFICATIONS:
Material:
Push Button: Thermal Plastic, rated UL 94V–0, color Black
Cover: Stainless Steel
Pivot Shell: Stainless Steel
Rated Voltage: 35V/AC Max
Environmental:
Lead free, RoHS compliant

RoHS COMPLIANT

UNLESS OTHERWISE SPECIFIED
ALL DIMENSIONS ARE INCH [MM]
TOLERANCES: EXCEPT AS NOTED

INCHES		HOLES	
.X	± .10	Ø.X	±.10
.XX	± .020	Ø.XX	±.015
.XXX	± .015	Ø.XXX	±.010

APPROVALS		DATE
DRAWN	DY	12/30/10
CHECKED		
APPROVED		

ADAM TECH
909 Rahway Avenue, Union, NJ 07083
Phone: 908-687-5000 Fax: 908-687-5710

TITLE
CF SOCKET EJECTOR, W/SHELL

SIZE	PART NO.	REV.
X	CFE-50-LXX	-

REF: S00009T | SCALE: NTS | SHEET 1 OF 1