Rev	AWO #	Description	Date	Appr
-		RELEASED	8/25/09	

APPROVED: _____

DATE: _____ TITLE: _____

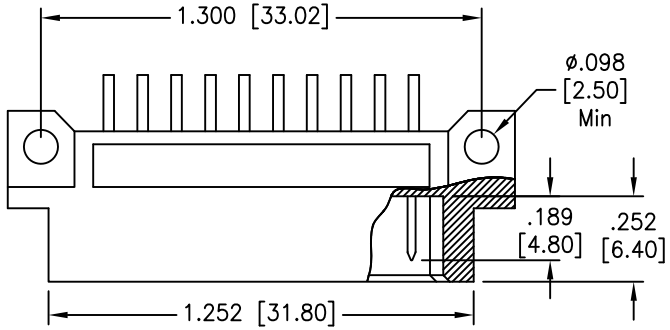

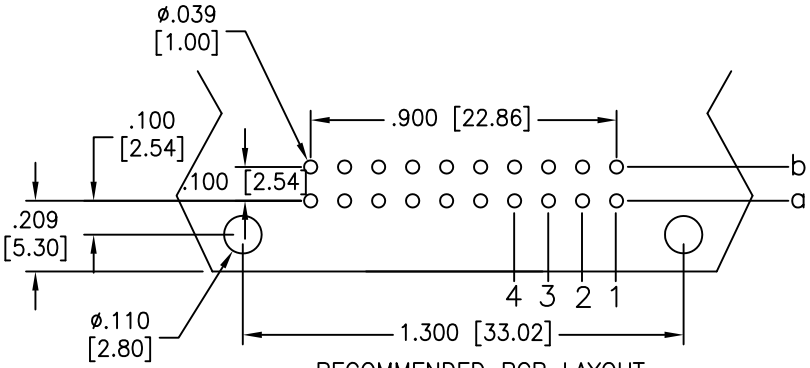

RECOMMENDED PCB LAYOUT

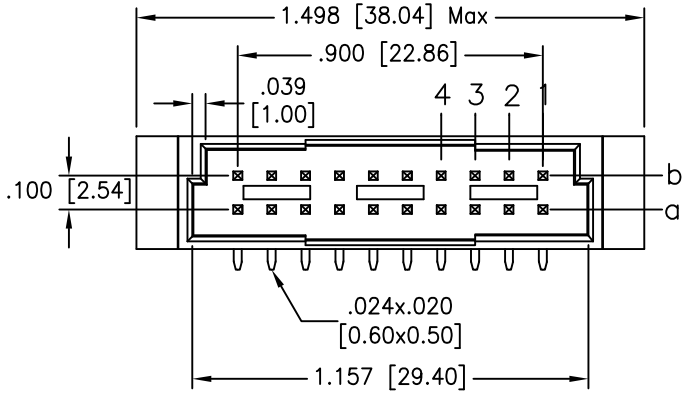

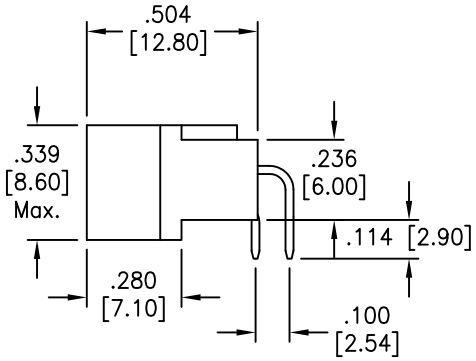

SPECIFICATIONS:
Material:
Insulator: PBT, glass reinforced, rated UL 94V–0
Contacts: Phosphor Bronze
Plating:
X Gold over Nickel underplate on contact area,
Tin over Copper underplate on solder tails.
(See chart for thickness)
Electrical:
Current rating: 2 Amps max
Contact resistance: 30 mohms max
Insulation resistance: 1000 Mohms min@ DC 500V
Dielectric withstanding voltage: 1000 VAC for 1 minute
Temperature Rating:
Operating temperature: –55˚C to +105˚C
Environmental:
Lead free, RoHS compliant.

RoHS COMPLIANT

"X"	PLATING	CLASS
1	30 u" Gold	1
2	15 u" Gold	2
3	Gold Flash	3

UNLESS OTHERWISE SPECIFIED
ALL DIMENSIONS ARE MM [INCHES]
TOLERANCES: EXCEPT AS NOTED

INCHES		HOLES	
.X	± .10	Ø.X	±.10
.XX	± .020	Ø.XX	±.015
.XXX	± .015	Ø.XXX	±.010

APPROVALS		DATE
DRAWN	DY	8/25/09
CHECKED		
APPROVED		

ADAM TECH
909 Rahway Avenue, Union, NJ 07083
Phone: 908-687-5000 Fax: 908-687-5710

TITLE
DIN TYPE HALF B MALE, 20 PINS LOADED
2 ROW, RIGHT ANGLE, ROW A& B LOADED

SIZE	PART NO.	REV.
X	DIN-20MR-S22-A1CX	-

REF: S00058T | SCALE: NTS | SHEET 1 OF 1