Rev	AWO #	Description	Date	Appr
-		RELEASED	7/26/24	

APPROVED: _____

DATE: _____ TITLE: _____

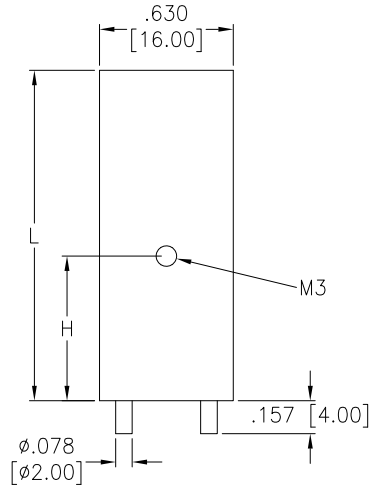

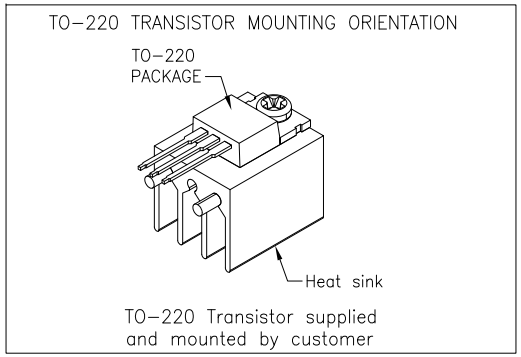

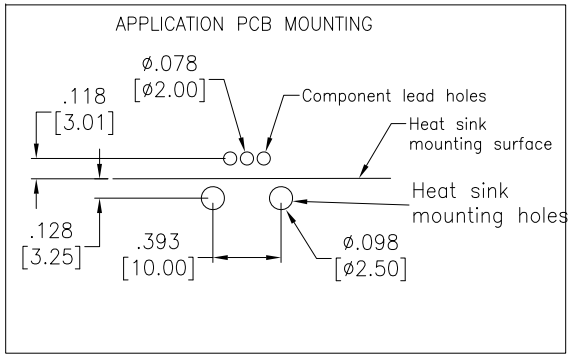

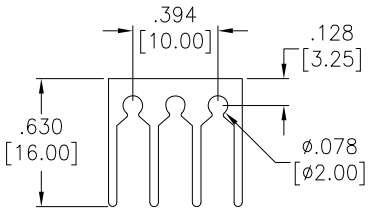

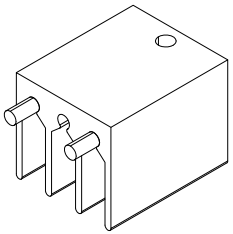

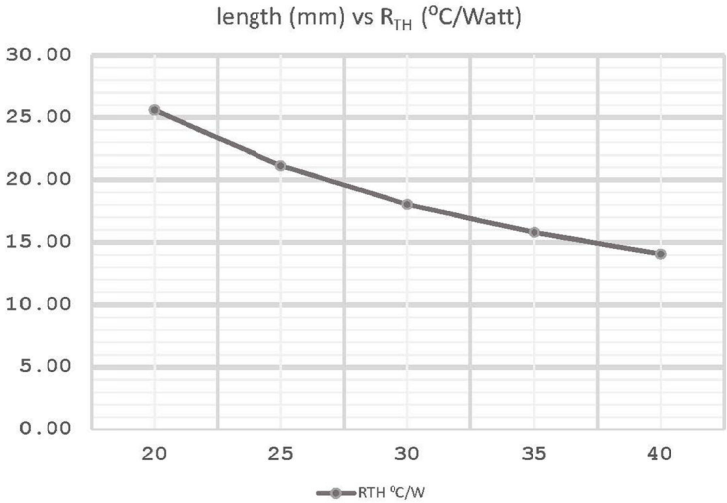

HSK-058-XX

ADAM TECH P/N	DIM "L"	DIM "H"	RTH °C/W	PACKAGE
HSK-058-01	.787 [20.00]	.689 [17.50]	25.62	TO-220
HSK-058-02	.984 [25.00]	.689 [17.50]	21.14	TO-220
HSK-058-03	1.181 [30.00]	.689 [17.50]	18.05	TO-220
HSK-058-04	1.378 [35.00]	.689 [17.50]	15.80	TO-220
HSK-058-05	1.575 [40.00]	.689 [17.50]	14.06	TO-220

SPECIFICATIONS:
Material:
Body: Aluminum 6063, Black Anodized
Environmental:
Lead free, RoHS compliant RoHS COMPLIANT

UNLESS OTHERWISE SPECIFIED ALL DIMENSIONS ARE INCHES [MM]. TOLERANCES: EXCEPT AS NOTED

INCHES		HOLES	
.X	± .10	Ø.X	±.10
.XX	± .020	Ø.XX	±.015
.XXX	± .015	Ø.XXX	±.010

DRAWN	SS	8/19/24
CHECKED	SS	8/19/24
APPROVED		

THIS DRAWING CONTAINS INFORMATION THAT IS PROPRIETARY AND SHOULD NOT BE USED WITHOUT PRIOR WRITTEN PERMISSION FROM ADAM TECH

ADAM TECH
909 Rahway Avenue,
Union, NJ 07083
Phone: 908-687-5000
Fax: 908-687-5710

TITLE
HEAT SINK, BOARD LEVEL, EXTRUDED,
FOR TO-220 TRANSISTOR PACKAGE

SIZE	PART NO.	REV.
X	HSK-058-XX	-

REF: - | SCALE: NTS | SHEET 1 OF 1