Rev	AWO #	Description	Date	Appr
-		RELEASED	9/14/04	
A		UPDATED	7/14/16	SS

APPROVED: _____

DATE: _____ TITLE: _____

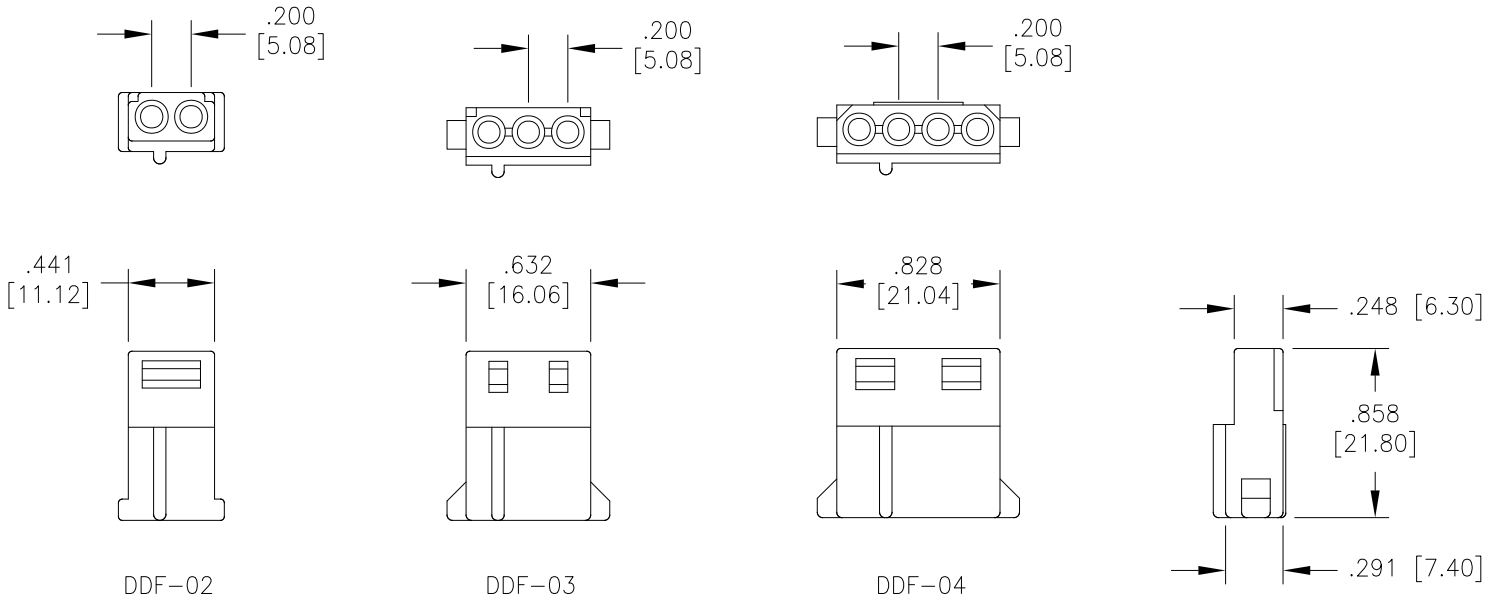

SPECIFICATIONS:
Material:
Insulator: Nylon 66, rated UL 94V-2
Insulator color: Natural
Electrical:
Operating voltage: 250 VAC max
Current rating: 5 Amps max
Insulation resistance: 1000 Mohms min @ 500 VDC
Dielectric withstanding voltage: 1500 VAC for 1 minute
Temperature Rating:
Operating temperature: -25°C to +85°C
Environmental:
Lead free, RoHS compliant. RoHS COMPLIANT

Note: Female crimp P/N: DFC-01-R

UNLESS OTHERWISE SPECIFIED
ALL DIMENSIONS ARE INCHES [MM]
TOLERANCES: EXCEPT AS NOTED

INCHES		HOLES	
.X	± .10	Ø.X	±.10
.XX	± .020	Ø.XX	±.015
.XXX	± .015	Ø.XXX	±.010

APPROVALS		DATE
DRAWN	SS	9/14/04
CHECKED		
APPROVED		

ADAM TECH
909 Rahway Avenue, Union, NJ 07083
Phone: 908-687-5000 Fax: 908-687-5710

TITLE
DISK DRIVE FEMALE HOUSING
2, 3 & 4 POSITION

SIZE	PART NO.	REV.
X	DDF-XX	A

REF: | SCALE: NTS | SHEET 1 OF 1