APPROVED: _____

DATE: _____ TITLE: _____

Rev	AWO #	Description	Date	Appr
-		RELEASED	11/04/11	
A		ADDED PLATING	9/12/13	AY/GC
B		UPDATE SPEC.	8/1/18	AY/TW
C		UPDATE DRAWING	5/30/19	AY/LW

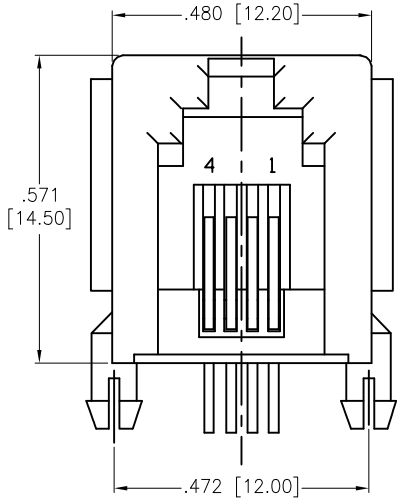

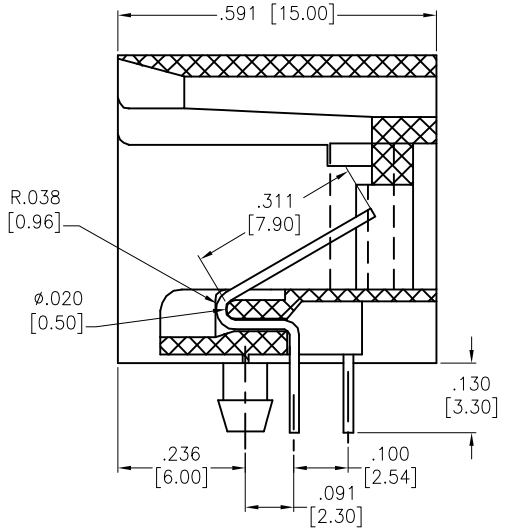

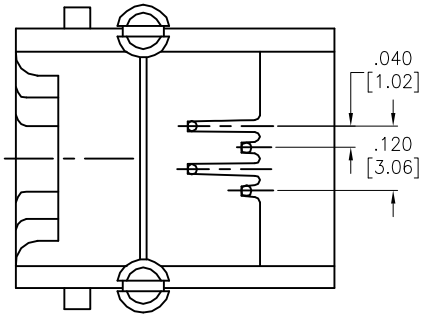

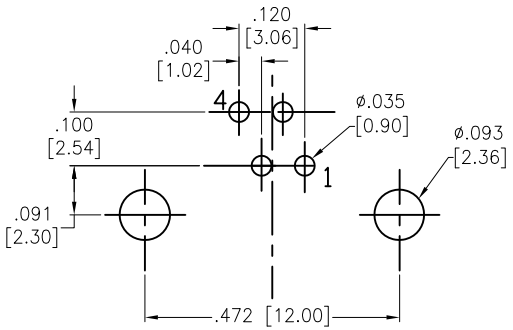

RECOMMENDED PCB LAYOUT

SPECIFICATIONS:
Material:
Insulator: PBT, Glass reinforced, rated UL 94V–0
Insulator color: Gray
Contacts: Phosphor Bronze
Cantacts Plating:
Round contact
Gold over Nickel underplate overall
Flat contact
Gold over Nickel underplate on contact area
Tin over Nickel underplate on solder tails
Electrical:
Voltage rating: 150 VAC rms
Current rating: 1.5 Amp
Contact resistance: 20 mohms max
Insulation resistance: 1,000 Mohms min @ 500 VDC
Dielectric withstanding voltage:
Contact to Contact: 1,000 VDC or AC Peak for 1 minute
Contact to Shield: 1,500 VDC or AC Peak for 1 minute
Temperature Rating:
Operating temperature: –40°C to +85°C
Environmental:
Lead free, RoHS compliant.

RoHS COMPLIANT

UNLESS OTHERWISE SPECIFIED
ALL DIMENSIONS ARE INCHES [MM]
TOLERANCES: EXCEPT AS NOTED

INCHES		HOLES	
.X	± .10	Ø.X	±.10
.XX	± .020	Ø.XX	±.015
.XXX	± .015	Ø.XXX	±.010

APPROVALS		DATE
DRAWN	TW	11/04/11
CHECKED	AY	11/04/11
APPROVED		

ADAM TECH INTERCONNECTS
909 Rahway Avenue,
Union, NJ 07083
Phone: 908-687-5000
Fax: 908-687-5710

TITLE: MODULAR TELEPHONE JACK, 4P4C
RIGHT ANGLE, PCB, GRAY

SIZE	PART NO.	REV.
X	MTJ-442X2	C

REF: S00005C | SCALE: NTS | SHEET 1 OF 1