APPROVED: _____

DATE: _____ TITLE: _____

Rev	AWO #	Description	Date	Appr
-		RELEASED	XX/XX/XX	
A		LOGO REVISION	4/7/06	
B		REVISED SHAPE	8/22/11	
C		REDRAWN	1/18/13	

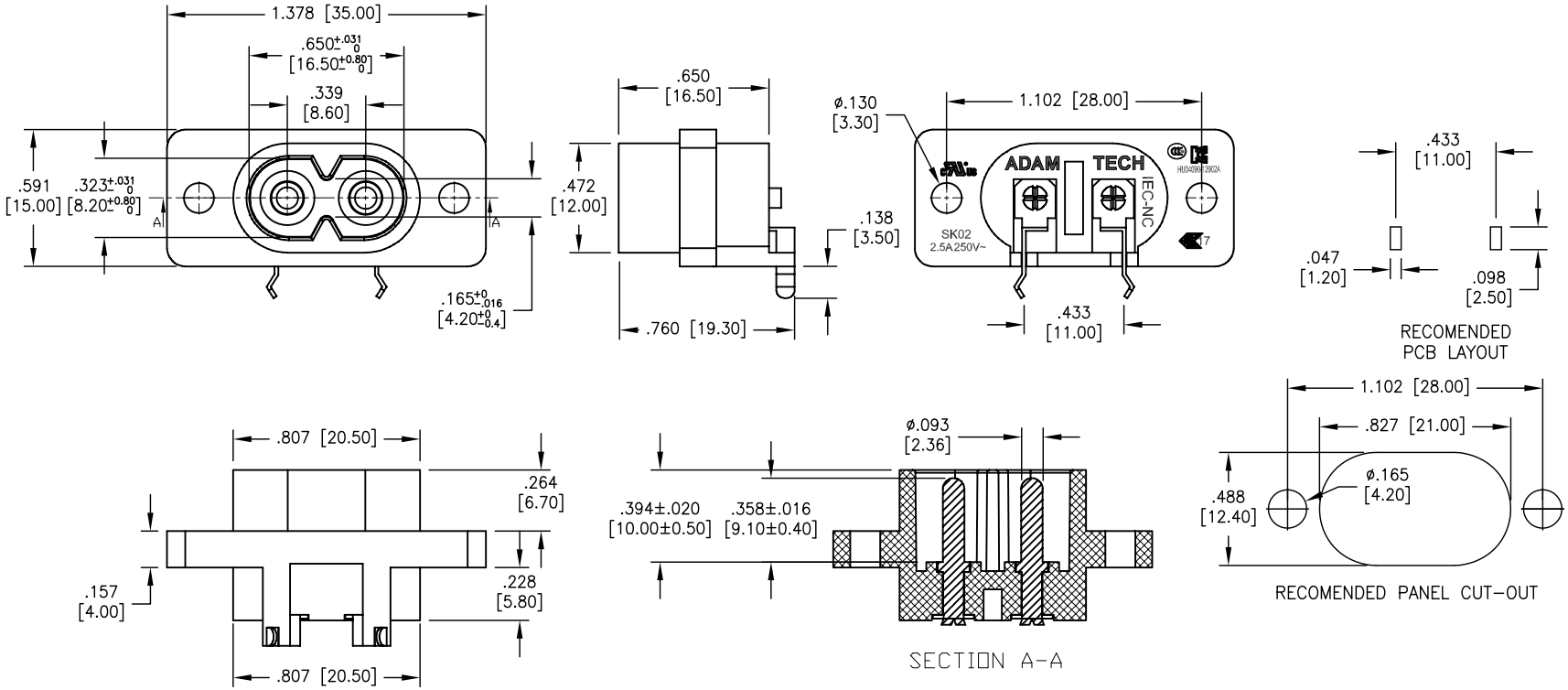

SPECIFICATIONS:

Material:

Insulator: PBT, rated UL 94V-0

Insulator color: Black

Contacts: Copper Alloy, Tin Plated

Center Pin: Copper Alloy, Nickel Plated

Electrical:

Operation voltage: 250 VAC max

Current rating: 2.5 Amps max

Insulation resistance: 100 Mohms min @ 500 VDC

Dielectric withstanding voltage: 3000 VAC for 1 minute

Environmental:

Lead free, RoHS compliant.

RoHS COMPLIANT

UNLESS OTHERWISE SPECIFIED
ALL DIMENSIONS ARE MM [INCHES]
TOLERANCES: EXCEPT AS NOTED

INCHES		HOLES	
.X	± .10	Ø.X	±.10
.XX	± .020	Ø.XX	±.015
.XXX	± .015	Ø.XXX	±.010

APPROVALS		DATE
DRAWN	SS	5/4/04
CHECKED		
APPROVED		

ADAM TECH

909 Rahway Avenue, Union, NJ 07083

Phone: 908-687-5000 Fax: 908-687-5710

TITLE

IEC 60320, C8, RIGHT ANGLE, PCB TERMINAL, PANEL MOUNT

SIZE	PART NO.	REV.
X	IEC-NC-A-4	C

REF: S00087C | SCALE: NTS | SHEET 1 OF 1