2019.01.09 10:12:15 +08'00'

APPROVED: _____

DATE: _____ TITLE: _____

Rev	AWO #	Description	Date	Appr
-		RELEASED	5/11/05	
A		REDRAWN	6/27/08	
B		UPDATED DRAWING	1/9/19	HR/YC

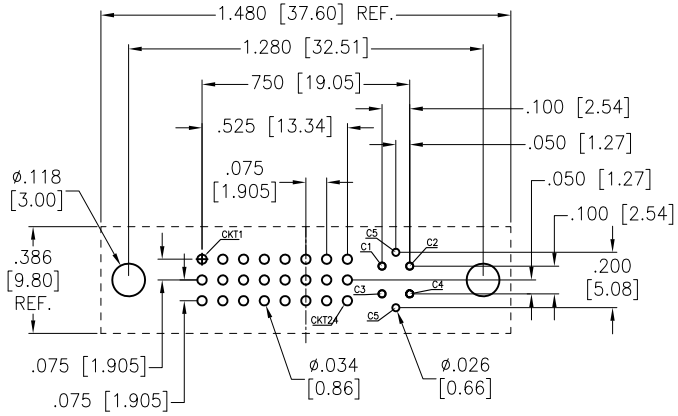

RECOMMENDED PCB LAYOUT

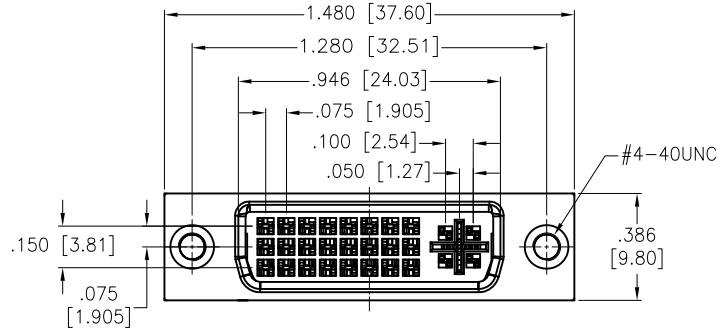

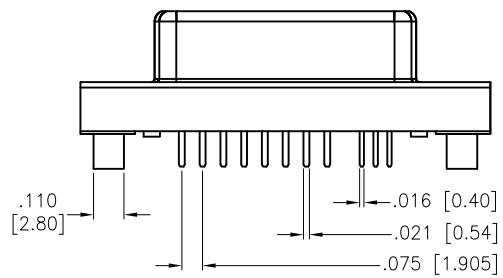

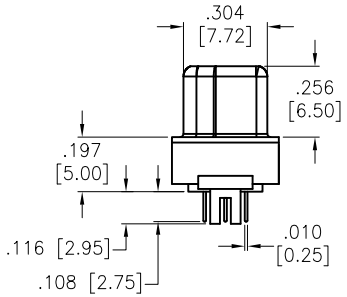

SPECIFICATIONS:

Material:

Insulator: PBT, rated UL 94V-0
Insulator color: Ivory
Contacts: Copper Alloy
Shell: SPCC, Nickel plated
Boardlock: Copper Alloy, Tin plated

Plating:

Gold flash over Nickel underplate on contact area,
Tin over Nickel underplate on solder tails

Electrical:

Voltage: 40 VAC (RMS) max.
Current rating: 1.5 Ampere per Contact
Contact resistance: 20 mohms max.
Insulation resistance: 1,000 Mohms min.
Dielectric withstanding voltage: 500 VDC (RMS)

Temperature Rating:

Operating temperature: -55°C to +85°C

Environmental:

Lead free, RoHS compliant

RoHS COMPLIANT

UNLESS OTHERWISE SPECIFIED
ALL DIMENSIONS ARE INCHES [MM]
TOLERANCES: EXCEPT AS NOTED

INCHES		HOLES	
.X	± .10	Ø.X	±.10
.XX	± .020	Ø.XX	±.015
.XXX	± .015	Ø.XXX	±.010

APPROVALS		DATE
DRAWN	SS	5/11/05
CHECKED		
APPROVED		

ADAM TECH INTERCONNECTS
909 Rahway Avenue,
Union, NJ 07083
Phone: 908-687-5000
Fax: 908-687-5710

TITLE: DIGITAL VIDEO INTERFACE SOCKET STRAIGHT PCB TAILS, ANALOG

SIZE	PART NO.	REV.
X	DVI-ST-24-2	B

REF: S00027T | SCALE: NTS | SHEET 1 OF 1