APPROVED: _____

DATE: _____ TITLE: _____

Rev	AWO #	Description	Date	Appr
-		RELEASED	1/4/05	
A		REDRAWN	10/5/07	
B		CHANGED ENGINEERING DESIGN	10/30/08	
C		REDRAWN	9/7/10	
D		REVISED LAYOUT	12/15/11	
E		REDRAWN	1/6/12	
F		REVISED SHAPE	3/4/14	AY/AC

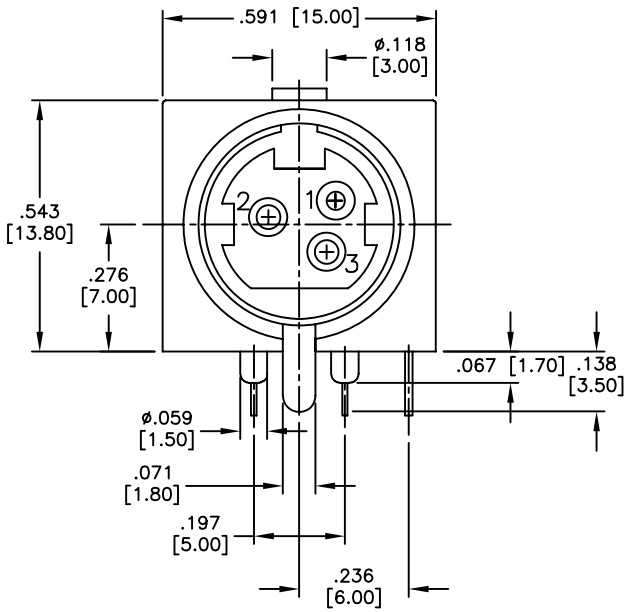

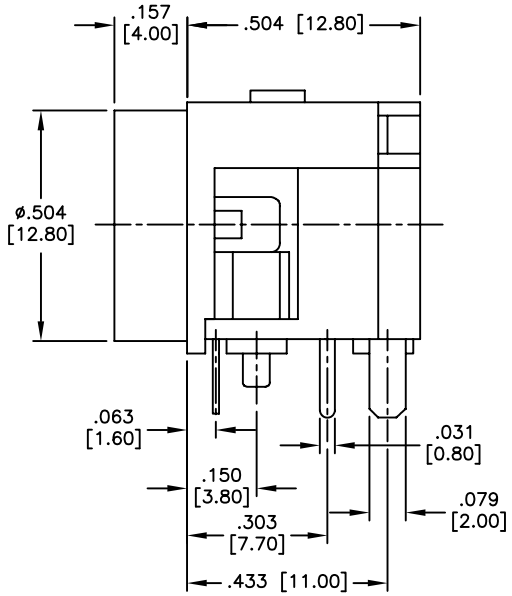

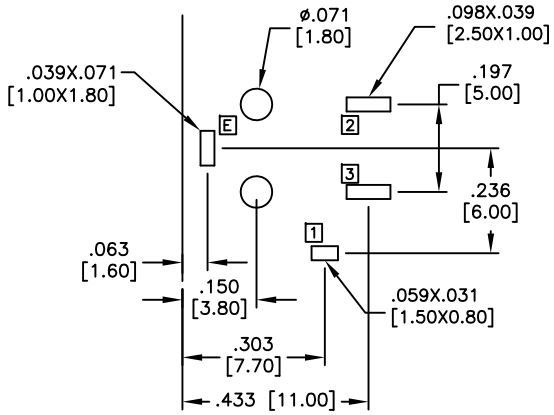

RECOMMENDED PCB LAYOUT

SPECIFICATIONS:
Material:
Insulator: PBT, glass filled, rated UL 94V-0
Insulator color: Black
Contacts: Phosphor Bronze
Plating:
Silver over Nickel underplate overall
Electrical:
Operating voltage: 50 VDC max.
Current rating: Power contacts 7.5 Amps.
Signal contacts 1 Amp.
Contact resistance: 30 mohms max. initial
Insulation resistance: 100 Mohms min.
Dielectric withstanding voltage: 500 VAC for 1 minute
Temperature Rating:
Operating temperature: -20°C to +70°C
Environmental:
Lead free, RoHS compliant.

RoHS COMPLIANT

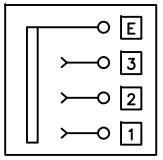

UNLESS OTHERWISE SPECIFIED
ALL DIMENSIONS ARE INCHES [MM]
TOLERANCES: EXCEPT AS NOTED

INCHES		HOLES	
.X	± .10	Ø.X	±.10
.XX	± .020	Ø.XX	±.015
.XXX	± .015	Ø.XXX	±.010

APPROVALS		DATE
DRAWN	SS	1/4/05
CHECKED		
APPROVED		

ADAM TECH
909 Rahway Avenue, Union, NJ 07083
Phone: 908-687-5000 Fax: 908-687-5710

TITLE
MINI DIN POWER JACK
2 POWER & 1 SIGNAL CONTACT

SIZE	PART NO.	REV.
X	MPJ-3P	F

REF: S00002C | SCALE: NTS | SHEET 1 OF 1