Rev	AWO #	Description	Date	Appr
-		RELEASED	8/05/08	
A		REVISED SPEC.	10/25/11	

APPROVED: _____

DATE: _____ TITLE: _____

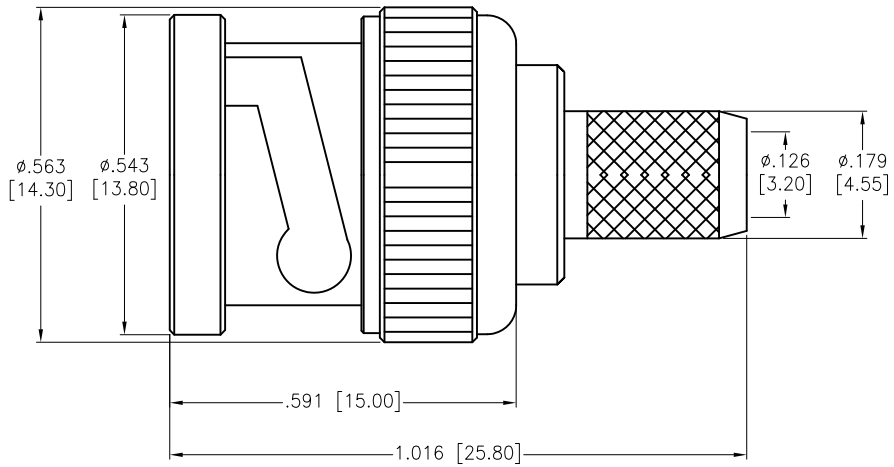

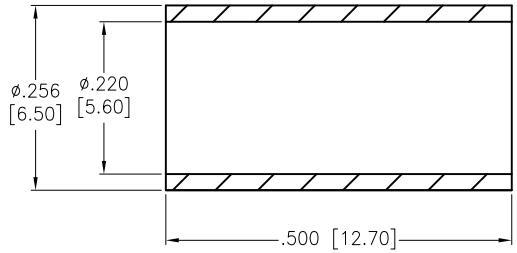

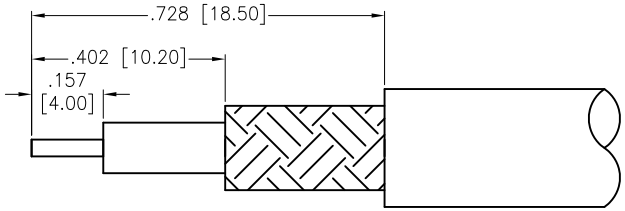

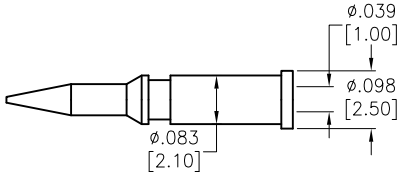

SPECIFICATIONS:

Electrical:

Nominal Impedance: 50 ohms

Frequency range: 0–4 GHz

Working Voltage: 500 VRMS max.

Dielectric Withstanding Voltage: 1,500 VRMS min.

Contact Resistance: 3 Milliohms max. (Center Contact)
2 Milliohms max. (Outer Contact)

Insulator Resistance: 5000 Megohms min.

Environmental:

Lead free, RoHS compliant.

RoHS COMPLIANT

UNLESS OTHERWISE SPECIFIED
ALL DIMENSIONS ARE INCHES [MM]
TOLERANCES: EXCEPT AS NOTED

INCHES		HOLES	
.X	± .10	Ø.X	±.10
.XX	± .020	Ø.XX	±.015
.XXX	± .015	Ø.XXX	±.010

APPROVALS		DATE
DRAWN	DY	8/05/08
CHECKED		
APPROVED		

ADAM TECH
909 Rahway Avenue, Union, NJ 07083
Phone: 908-687-5000 Fax: 908-687-5710

TITLE: BNC MALE CRIMP

SIZE	PART NO.	REV.
X	RF1-03-D-01-50	A

REF: S00049T | SCALE: NTS | SHEET 1 OF 1