Rev	AWO #	Description	Date	Appr
-		RELEASED	11/20/14	
A		UPDATE SPEC.	9/20/16	AY/YC

APPROVED: _____

DATE: _____ TITLE: _____

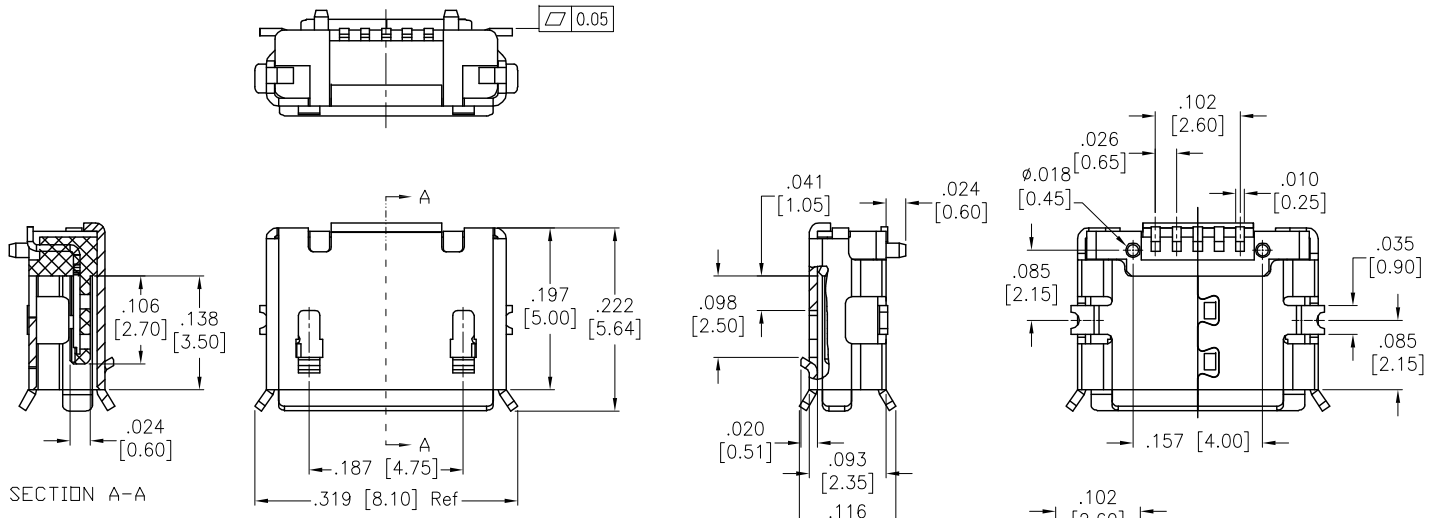

RECOMMENDED PCB LAYOUT

SPECIFICATIONS:
Material:
Insulator: Hi–temp thermoplastic, rated UL 94V–0
Insulator color: Black
Contacts: Copper Alloy
Shell: Copper Alloy, Nickel plated
Plating:
Gold over Nickel underplate in contact area,
Matte Tin or over Nickel underplate on solder tails
Electrical:
Current rating: (1, 5 Pin): 1.8A Max, (2, 3, 4Pin): 1.0A Max.
Contact resistance: 30 milliohms max.
Insulation resistance: 100 Megohms min.
Dielectric withstand voltage: 100 VAC for 1 minute
Temperature Rating:
Operating temperature: –30°C to +80°C
Environmental:
Lead free, RoHS compliant.

RoHS COMPLIANT

PACKAGED ON TAPE & REEL

UNLESS OTHERWISE SPECIFIED
ALL DIMENSIONS ARE INCHES [MM]
TOLERANCES: EXCEPT AS NOTED

INCHES		HOLES	
.X	± .10	Ø.X	±.10
.XX	± .020	Ø.XX	±.015
.XXX	± .015	Ø.XXX	±.010

APPROVALS		DATE
DRAWN	AY	11/20/14
CHECKED	NP	11/20/14
APPROVED		

ADAM TECH
909 Rahway Avenue, Union, NJ 07083
Phone: 908-687-5000 Fax: 908-687-5710

TITLE
MICRO USB, TYPE B, SINGLE PORT
FEMALE, TRUE SMT TYPE, TAPE & REEL

SIZE	PART NO.	REV.
X	MCR-B-S-RA-TSMT-CS4A-T/R	A

REF: S00097C | SCALE: NTS | SHEET 1 OF 1